Design, construction and monitoring of concrete roadway pavement at extremely steep longitudinal slopes

Christopher T. Senseney[a]* and P. C. Suermann[b]

[a]Department of Civil, Environmental and Architectural Engineering, University of Colorado, Boulder, CO, USA; [b]Department of Construction Science, Texas A&M University, College Station, TX, USA

Provide full correspondence details here including e-mail for the *corresponding author

senseney@colorado.edu, ORCID: 0000-0001-9709-1268
suermann@tamu.edu, ORCID: 0000-0002-2322-5486

Christopher Senseney, PhD, P.E., teaches classes in the Construction Engineering and Management program in the Department of Civil, Environmental and Architectural Engineering at the University of Colorado. He previously served as a Civil Engineer officer in the U.S. Air Force for 20 years, and he was a pavement designer for the Kiewit construction company.

Patrick Suermann, PhD, P.E., is the Department Head and Associate Professor for the Department of Construction Science at Texas A&M University. Previously, he led numerous, large-scale military construction projects around the world and excelled as an educator during a distinguished 20-year career as a U.S. Air Force Civil Engineer officer.

Disclosure Statement - No potential competing interest.

Design, construction and monitoring of concrete roadway pavement at extremely steep longitudinal slopes

Most conventional roadway pavements are not constructed at grades greater than 15 percent due to construction limitations and/or motor vehicle operator safety concerns; however, there are conditions, especially in the developing world, where roadways must be built at extremely steep longitudinal slopes. Currently, there are limited published design procedures for extremely steep concrete roadways, and little guidance on either the type, shape, or spacing of sliding restraint devices for these pavements. This paper presents an original design methodology for concrete roadways at slopes of 15 to 60 percent with integral concrete lug anchors to resist sliding where the design computes a sliding factor of safety of the earth pressure resistance developed by the lug anchors as compared to the downhill forces acting on the concrete pavement from gravity, vehicle loading and vehicle braking. A case study of a concrete roadway construction project, which uses the lug anchor design methodology with slopes of 23 to 58 percent and with limited right of way, is also presented. Many valuable lessons were learned during the construction of a roadway at such steep grades, including novel ways to transport and place fresh concrete and the fabrication of specialized equipment to screed and smooth concrete on a steep slope.

Keywords: steep slope concrete pavement; pavement design; concrete pavement construction; concrete pavement smoothness; lateral earth pressure

Introduction

Roadway pavements, e.g. asphalt or portland cement concrete, are not conventionally built at extremely steep longitudinal slopes (greater than 15 percent grade) due to motor vehicle operator safety concerns and construction limitations. A longer indirect alignment with gradual grades through hilly or mountainous regions is often established; however, there are conditions where the right of way for a road is limited to an alignment directly on steep longitudinal grades. One such condition is in developing countries, where an existing low volume road may be aligned on a steep grade and the

roadway may not be able to be easily re-aligned due to cost, conflict with dwellings and infrastructure, and/or availability of materials and equipment.

The installation of concrete pavement on steeply sloped roadways has advantages over asphalt, gravel, or unsurfaced conditions due to the increased strength, increased durability, and the ability to better resist damage from intense precipitation events. On rising grades, the loads on the rear axles of trucks are increased due to force equilibrium (Razouki and Radeef, 2005), and it has been shown that overloaded and tall trucks can cause excessive damage to flexible pavements when driving up steep slopes, especially in developing countries (Karim et al., 2013, Razouki et al., 2020). The stability and rigidity of concrete makes it more resistant to the higher stress levels induced by trucks and motor vehicles on steep grades. Furthermore, the World Bank (Dos Anjos Ribeiro Cordeiro et al., 2017, Johnson et al., 2019) has reported that concrete pavement can provide improved resilience to flooding, inundation, erosion, and heavy surface runoff that may arise from extreme weather events happening at an increased rate, possibly due to global climate change. For these reasons, rigid concrete is a preferred alternative to asphalt or gravel on steeply sloped roadways, especially at grades greater than 15 percent.

There are scarce published design procedures and criteria for the design and construction of concrete pavement at steep longitudinal grades. ACI 330.2R-17 (ACI Committee 318, 2019) provides recommendations for restricting concrete slab movement at industrial and trucking facilities where fine-grained subgrade soils, steep slopes, and forces of braking and vehicle turning can cause in-plane sliding of the concrete pavement panels and lead to overly wide joints and reduced joint stability. The ACI states that tie bars are often used to restrain concrete slabs, but this practice alone may not be sufficient where the loads are higher than usual (e.g., extremely steep

slopes), and especially where sliding forces are present over large areas. The ACI guide identifies pre-set or integrally placed trench footings (lug anchors), post-style anchors, or thickened edges as additional sliding mitigation techniques, but the guide does not offer a design methodology to layout the restraints. Perrie (Perrie, 2000) provides recommendations for lug anchors across the full width of steep concrete low volume roads for two situations, 1) the placement of anchors at the bottom end of the grade for slopes between 5 and 10 percent; and 2) the placement anchors at the bottom end of the grade and at 100 ft (30 m) intervals thereafter uphill for slopes greater than 10 percent.

The objective of this paper is to introduce an original design methodology for a unique concrete road condition, namely extremely steep longitudinal grades (15%-60%), for which a design procedure does not currently exist to the authors' knowledge. The new methodology uses integral concrete lug anchors and was developed for specific project along the United States and Mexico international border, presented here as a case study, where concrete pavement was specified by the owner/agency to prevent washouts and erosion, and where there was little right of way to allow construction of a more gradual roadway slope. The methodology computes the sliding factor of safety of the passive earth pressure resistance developed by the lug anchors as compared to the downhill forces acting on the concrete pavement from gravity, vehicle loading and vehicle braking. A secondary objective of this paper is to present lessons learned from the transport, placement, screeding, and finishing of concrete at such steep grades and where roadway smoothness specifications must be met. Additionally, survey data from a closed traverse survey conducted during construction and three months later is presented. The maximum horizontal concrete pavement movement was measured at 0.71 in (18 mm) between the two surveys, which is within an acceptable range of movement for similar types of concrete roads.

Project background and soil conditions

The concrete road construction project was located along the United States side of the international border with Mexico, where the climate in the region is arid desert with an average yearly high temperature 84° F (29° C), average yearly low temperate of 60° F (16° C), and average annual rainfall of 7.74 in (19.6 cm). The project required the construction of a gravel road at slopes less than 15 percent grade, and construction of a 12-ft (3.7-m) wide unreinforced concrete paved road, with load transfer dowels, at slopes between 15 and 60 percent. Concrete durability was not a major concern due to the arid environment, negligible sulfate exposure, and limited number of days with temperatures below freezing. This paper will focus on a specific section of the 12-ft (3.7-m) wide concrete road pavement at the east side of a high point on the project, referred to as Promontory Point, where a 1465-ft (447-m) long section of road begins at the base of the mountain with a grade of 23 percent and continuously steepens to a grade of 58 percent near the summit. Promontory Point is used a pseudonym in this paper for the actual name of the mountain peak on the project site to preserve the confidentiality of the project.

This project included specialized requirements and limitations not normally found on conventional roadway construction projects or not normally specified for concrete placed at steep slopes (e.g. dam spillways, concrete drainage structures, etc.). The construction specifications required the pavement to be smooth and true to grade and cross section. When tested with a 10-foot (3.05-m) straightedge parallel with the centreline of the pavement, the surface could not vary more than 1/4 inch (6.35 mm) from the testing edge of the straightedge. Rock rip rap or a concrete apron was required on the south side road to prevent erosion, and the project team elected to pave the apron with concrete, which the team completed prior to the roadway pavement placement,

allowing the edge of the concrete apron to serve as an edge form and construction joint for the concrete road paving. The project team was restricted to a narrow 60-ft (18-m) wide right-of-way through the Promontory Point alignment during construction since there was an international border on one side and a national park on the other side of the alignment. The project team was not allowed to construct access roads to enter the right of way from either side of the alignment, which significantly limited the options for transporting materials and moving equipment, especially over such steep terrain.

The steep grades and rock formations within the road alignment are part of a mountain range, which was formed as a result of ancient volcanic activity from the Quaternary period. Soil borings were taken at either 500- or 1000-ft (152- to 304-m) intervals along the alignment to depths of 10 to 20 ft (3 to 6 m). As shown in Table 1, soil samples of three borings taken along the Promontory Point alignment indicated the in-situ near surface soils, to a depth of approximately 5 ft (1.5 m) are generally classified as very dense sandy silt with gravel (ML), very dense well graded gravel with sand (SM), and very dense silty sand (SM). There were no soil strength or stiffness tests conducted on the subgrade soil at the Promontory Point site; however, California Bearing Ratio (CBR) tests were conducted on 10 nearby soil samples with similar soil classifications, which yielded a 25th percentile CBR value of 35 based on cumulative distribution function of the dataset. A CBR of 35 would correlate to a resilient modulus (M_R) value of approximately 25,000 psi (172 MPa) based on AASHTO 1993 Design Guide correlation of $M_R = 2555(CBR)^{0.64}$ (AASHTO, 1993).

[Table 1 near here].

Lug anchor design methodology

The shape and orientation of the full width lug anchors were based on recommendations in ACI 330.2R-17 (ACI Committee 330, 2017), which provides details of lug anchors

with the stated purpose of minimizing concrete pavement panel sliding in areas with fine-grained subgrade soils, steep pavement grades, and locations where heavy vehicles brake and turn. The ACI guide's example cross-section detail shows a lug anchor that is 18-in (460-mm) wide and 24-in (600-mm) deep and includes a 4-ft (1.2-m) thickened edge extending from both sides of the lug. The lug is longitudinally and transversely reinforced with No. 4 rebar. The ACI guide states that some roadway agencies recommend lug anchor spacings of less than 40 ft (12.2 m) and as much as 200 ft (61 m); however, the guide does not provide a design methodology or a procedure to determine lug anchor spacing.

The lug anchor detail in ACI 330.2R-17 is intended for jointed plain concrete pavement (JPCP) at industrial and trucking facilities; however, the ACI lug anchor is similar in form and concept to the lug anchor designs used for the ends of continuously reinforced concrete pavement (CRCP). All concrete pavements exhibit movement, primarily due to volume changes from temperature fluctuations, but also due to drying shrinkage and moisture changes. CRCP exhibits more movement than JPCP since CRCP is constructed without contraction joints. Lug anchors, as well as other expansion control devices, are generally installed at CRCP terminal joints to prevent damage to adjacent structures, e.g. bridge foundations, from CRCP expansion. Various terminal lug anchor systems for CRCP have been proposed and evaluated by researchers and highway agencies (Mitchell, 1963, McCullough, 1971, McCullough and Wu, 1992, Zollinger and Soares, 1999, Jaiswal, 2012, Ryu et al., 2012, Ren et al., 2013, Roesler et al., 2016, Oh et al., 2016, Cargnin and Balbo, 2021). Lug anchors have been used for terminal systems at bridge approaches with JPCP (Shelby and Ledbetter, 1962), but the use lug anchors in modern JPCP roadways is limited.

Since the forces acting on the JPCP roadway lug anchors for this project were different than the forces acting on conventional CRCP and JPCP roadway terminal anchorage systems, the team needed to develop an original lug anchor design methodology. The methodology for the lug anchor restraint system assumed that downhill pavement sliding from the gravitational force of the concrete pavement mass, the vehicle load, the vehicle braking force, and active earth pressure are restrained by the passive earth pressure resistance of the in-situ subsoil at downhill side the anchors.

As specified in the project documents, the design vehicle for the roadway, and the associated restraint system, was a single 35,000-lb (16,000-kg) truck. The net downhill load ($F_{downhill\text{-}net}$) from the design vehicle and concrete was taken as the sum of the orthogonal component ($F_{truck\text{-}orthog}$) and braking force ($F_{braking\text{-}orth}$) of a truck between proposed lug anchors, plus the gravitational force of the concrete mass ($F_{concrete\text{-}orthog}$), minus the friction resistance between the cast-in-place concrete and the native subgrade ($R_{concrete\text{-}friction}$) as shown in Fig. 1. The braking force was assumed to be 80 percent of the normal component of the vehicle weight, a value that has been demonstrated to be the maximum braking force that could be applied before the vehicle's tires disengage with the pavement (Barber, 1963). Vehicle traffic information provided in the project documents indicated that no more than one 35,000-pound (16,000-kg) truck at a time would be expected on the extreme slopes between lug anchors with our recommended lug anchor spacing.

Factor of safety against sliding

The factor of safety against sliding of the lug anchor design was computed by dividing the passive resistive force on the downhill side of the anchor ($R_{anchor\text{-}passive}$) by the net downhill load of the vehicle and concrete plus the active earth pressure on the uphill

side of the anchor ($F_{anchor\text{-}active}$). The sliding factor of safety of the anchor ($FS_{sliding}$) follows as Eqn. 1:

$$FS_{sliding} = \frac{R_{anchor-passive}}{F_{downhill-net}+F_{anchor-active}} \qquad (1)$$

where $F_{downhill\text{-}net}$ equals $F_{truck\text{-}orthog}$ plus $F_{braking\text{-}orth}$ minus $F_{concrete\text{-}orthog}$. Consistent with the industry standard for sliding factors safety in the design of retaining walls, $FS_{sliding}$ was limited to a minimum of 1.5. During the design process, the anchor key spacing was optimized to keep $FS_{sliding}$ close to, but not less than, 1.5.

Lateral earth pressure calculation

Lateral earth pressure calculations were based on the Logarithmic Spiral earth pressure theory developed by Terzaghi (Terzaghi, 1943). Duncan and Mowka (Duncan and Mokwa, 2001) found the Logarithmic Spiral passive pressure theory provided the most accurate method for computing ultimate passive soil resistance as compared to the Coulomb and Rankine theories. Logarithmic earth pressure coefficients were selected from charts for a sloping wall with granular soil and wall friction from NAVFAC Design Manual 7.02 (NAVFAC, 1986), which are derived from tables by Caquot and Kerisel (Caquot and Kérisel, 1948). The ratio of the friction between soil-concrete interface (δ) and the coefficient of friction of the soil (φ) was assumed to be $\delta/\varphi = 0.8$ based on the friction of similar materials reported by Potyondy (Potyondy, 1961). With the Logarithmic Spiral method, the passive earth pressure resistance at the downhill side of the lug anchor $R_{anchor\text{-}passive}$ and the active earth pressure force on the uphill side of the lug anchor $F_{anchor\text{-}active}$ were calculated in Eqn. 2 and Eqn. 3, respectively:

$$R_{anchor-passive} = {}^{1}/_{2}\, K_P \gamma H_{downhill}^2 \qquad (2)$$

$$F_{anchor-active} = {}^{1}/_{2}\, K_a \gamma H_{uphill}^2 \qquad (3)$$

where K_p is the passive earth pressure coefficient, K_a is the active earth pressure coefficient, γ is the soil unit weight, $H_{downhill}$ is the height of the downhill face of the lug anchor and H_{uphill} is the height of the uphill face of the lug anchor. The roadway slopes, internal angle of friction of the soil, calculated earth pressures, lug anchor spacings, and $FS_{sliding}$ for the lug anchors are shown in Table 2. The $FS_{sliding}$ values at slopes of 20% and 30% are negative since the friction resistance term ($R_{concrete\text{-}friction}$) is large at lower slopes and is subtracted in the calculation of the $F_{downhill\text{-}net}$ term, which makes the $F_{downhill\text{-}net}$ negative. In Eqn. 1, if $F_{downhill\text{-}net}$ term is more negative than the positive value of $F_{anchor\text{-}active}$, then the $FS_{sliding}$ value will be negative. This simply means that friction between the concrete and the subgrade overcomes all downhill forces and potentially no additional sliding restraint (i.e. lug anchor) would be necessary; however, we specified the construction of lug anchors at slopes of 20% and 30% with a spacing of 120 feet (36 m) to be relatively consistent with lug anchor recommendations by Perrie (Perrie, 2000).

[Table 2 near here].

Reinforcement design

The design and sizing of the reinforcement for the concrete lug anchors was based on possible failure by shear sliding along a crack in the concrete pavement slab. It was assumed that a crack will form in the slab on the downhill side of the lug anchor where a weakened plane sawcut contraction joint was specified. The contraction joint was placed at a slight offset from the lug anchor, to create a crack at the weakened plane that would extend perpendicular to the reinforcement, as shown in Fig. 2. When shear acts along the crack, the crack faces attempt to separate since the faces are rough and irregular, thus causing tension in the reinforcement. The applied shear from vehicle

loading will be resisted by friction between the crack faces, by resistance to the shearing of aggregate protrusions on the crack faces, and by dowel action of the reinforcement crossing the crack.

According to ACI 318-19 (ACI Committee 318, 2019), the required area of shear-friction reinforcement A_{vf} can be calculated with Eqn. 4 as:

$$A_{vf} = \frac{V_u}{\varphi f_y \mu} \qquad (4)$$

where V_u is the factored shear load, φ is the strength reduction factor (= 0.75 for shear loading), f_y is the yield strength of the steel (= 40,000 psi [275 MPa]), and μ is the coefficient of friction (= 1.4 for concrete placed monolithically). The 35,000-lb (16,000-kg) truck, with 8750 lb (4000 kg) per tire, generates the factored shear load V_u on the reinforcement and this load was distributed to the bars through dowel group action per Huang (Huang, 1993). The dowel group action assumes the load from truck tire or tires is shared by each of the reinforcement bars with the bar directly underneath the tire experiencing the greatest shear load and the load decreases inversely proportional to distance of the tie bar from the point of loading. The shear-friction analysis calculated the maximum projected shear load on a reinforcement bar and led to selection of No. 4 bars with16-in (40-cm) centre-to-centre spacing for the lug anchor reinforcement.

Concrete roadway pavement design methodology

The JPCP structural roadway design followed the concrete pavement design procedure outlined in U.S. Army Corps of Engineers UFC 3-250-01 (UFC 3-250-01, 2016), which uses a Westergaard analysis (Westergaard, 1926) to calculate stresses in the pavement acting under the wheel load and uses a separate fatigue analysis model to determine the allowed number of wheel load repetitions. The inputs into the UFC 3-250-01 JPCP

design chart for a 3-axle, 35,000-lb (16,000-kg) vehicle were a concrete flexural strength of 600 psi (4137 kPa), a modulus of subgrade reaction (k-value) of 200 pci (54 MPa/m), and a traffic load of 55,000 truck passes. The 55,000 truck passes represent the total predicted 35,000-lb (16,000-kg) truck loadings for a 25-year design life of the roadway based on traffic information provided in the project documents. The CBR 35 subgrade soil near Promontory Point would correspond to a k-value of 375 pci (101 MPa/m) based on the UFC 3-250-01 correlation of $k = (1500 * CBR/26)^{0.7788}$ (for imperial units); however, we chose to use a k-value of 200 pci (54 MPa/m) since stiffness testing of the Promontory Point subgrade was not directly conducted. The UFC 3-250-01 JPCP design chart yielded a required concrete thickness of 5.75 in (14.6 cm), which we rounded up to 6 in (15.2 cm) for constructability purposes. Fig. 3 shows a profile view of the pavement section and how the pavement was designed with a thickened edge (or taper) into the lug anchor at both the uphill and downhill sides of the anchor.

The mix design for the 4,000 psi (27.6 MPa) compressive strength concrete used on the project is shown in Table 3. A 4,000 psi (27.6 MPa) mix, as opposed to a conventional 3,000 psi (20.7 MPa) roadway mix, was used to improve the shear resistance at the reinforcement bars and to provide added strength to the lug anchor structures. A 2-in (5-cm) slump mix was selected after some trial-and-error experimentation by the concrete labour crew at test sections with workability and screeding on an incline slope. Although fly ash was not required due to limited durability and environmental concerns, 20-percent fly ash replacement by weight was added to the mix to improve the workability and finishability of the fresh concrete to help achieve the smoothness specifications required for the roadway. Water reducer and

hydration stabilizer admixtures were included to increase workability and to extend initial set time, respectively.

[Table 3 near here].

Construction process

Placement of concrete at extreme longitudinal slopes was challenging due to difficulties with material transport, concrete forming, equipment constraints, and safety. For the Promontory Point section of the project, concrete could not be delivered directly to the forms by mixer truck since large trucks could not safely travel up or down the nearly 60 percent grade and there was no right of way on either side of the alignment to allow the building of temporary access roads. Pumping of concrete to the forms was also not feasible because an expensive staged pumping system would be needed to generate enough pressure to pump the concrete a horizontal distance of approximately 1500 ft (457 m) and to an elevation difference of approximately 400 ft (122 m) to the summit of the mountain. A concrete pumping system could not be economically placed on the top of Promontory Point either, since the slope and limited right of way restrictions are similar on the west side of the mountain as on the east side of the mountain. The only realistic option for the Promontory Point roadway construction was to haul the fresh concrete to the forms up the slope with a tracked loader.

The transport of the concrete and the other sequential steps of the concrete roadway construction process are explained in the following sections.

Lug anchor trench and reinforcement. The 24-in (600-mm) deep and 18-in (450-mm) wide trenches, which served as earthen forms for the concrete lug anchors, were excavated with a mini-excavator and hand shovels at an interval equal to or less than the lug anchor spacing specified in Table 2. Inverted standee, or U-shaped, No. 4 reinforcement bar sections were placed in the trenches at 16-in (40-cm) transverse

spacing with transverse reinforcement bar for support and rebar chairs to maintain proper cover as shown in Fig. 4a. At the steepest sections of the roadway, extra transverse bar supports and rebar chairs were used to prevent displacement of the bar cage during concrete pours.

Concrete transport. Fresh was concrete was delivered to the base of the hill from a nearby mobile batch plant by mixer truck to a track loader equipped with a 2-yd^3 (1.5-m^3) capacity side dump bucket (see Fig. 4b). The track loader would transport an approximate 3/4-yd^3 (0.57-m^3) load of concrete up the steep grade and side dump the fresh concrete into to a 1-yd^3 (0.75-m^3) capacity crane bucket attached to the arm of a feller buncher machine parked adjacent to the formwork. A feller buncher machine, traditionally used in logging operations, was utilized for this project since the machine offers a self-levelling cabin for operator comfort and improved safety on steep terrain.

Concrete placement in forms. The feller buncher operator would manoeuvre the crane bucket over the formwork for placement (see Fig. 4c). A concrete labourer in the forms controlled the rate and quantity of concrete discharged from the crane bucket with a lever on the bucket, which allowed the labour crew to distribute concrete to sections of the slab starting at the low end of the form and working to the high end of the form. Portions of the 3/4-yd^3 (0.57-m^3) load would be discharged into the form with two labourers manually distributing the fresh concrete throughout the form with heavy-duty concrete placer rakes and another labourer distributing concrete with a flat blade shovel. This step usually required the laborers to pull and move the fresh concrete up the grade against gravity. When the concrete load was uniformly distributed in the form, a labourer would vibrate the mix to remove entrapped air using a concrete consolidation vibration tool.

Concrete Screeding and Smoothing. A custom fabricated paving skid, which supported a roller screed used to create a smooth roadway surface, was anchored into subgrade above the slab being poured. Each corner of the bottom of the skid had a height adjustable leg that was driven and secured into the subgrade at a specified height to level the skid platform. The skid platform held two hydraulic pumps and two 11-horsepower motors that were paired together to power two winches connected to the sides of a roller screed (see Fig. 4d). The two winches could independently pull the rotating roller screed up the slope with 1/2-in (13-mm) diameter steel cables that provided the force for the roller screed to distribute and form the concrete surface in conjunction with two concrete labourers who manipulated pull handles positioned at each end of the roller screed (see Fig. 4e). The roller screed operation helped ensure the pavement surface met the 1/4-inch (0.64-cm) smoothness specification as measured with a 10-foot (3.05-m) long straightedge.

Concrete jointing, finishing, and tining. Preformed, 1-1/2-in (3.8-cm) deep, plastic contraction joint formers, spaced every 12 feet (3.7 m), were placed in the concrete to control random cracking. The preformed joint former is a two-piece system that is inserted into fresh concrete and then the top section is pulled free once the concrete is cured (see Fig. 4f). Sawcutting of contraction joints with a hand-held concrete cutting saw was not allowed by specification. Sawcutting with a walk-behind saw was not feasible at slopes greater than 30 percent since gas powered walk-behind concrete saw engines have safety cutoff switches when the equipment tilt angle is exceeded to prevent problems with engine oil circulation, and the walk behind saws can become unstable and unsafe at these slopes. The concrete was further smoothed and finished with bull floats and other hand tools. The surface was manually tined in the transverse direction with a tine rake to enhance surface friction and sprayed with a liquid curing

compound membrane. Fig. 4f shows a close-up view the preformed plastic control joint, tining, and curing compound on the surface of the concrete roadway.

Concrete roadway construction at steep slopes presented unique safety issues that required creative procedures to mitigate. The primary safety concern of the concrete labour crew was losing their footing. The laborers wore high traction boots and kept the soles of their boots clean to avoid slips and falls. To aid in walking up and down the slope, a ladder walkway with wooden rungs and rubber side rails was fastened to the concrete apron adjacent to the concrete roadway forms. There was also a safety concern that equipment, e.g. the roller screed, could break free and tumble down the slope; and therefore, no personnel were permitted below the roller screed when concrete was being placed or finished. In some cases, it was nearly impossible for the equipment operators to see the concrete labourers, especially when the feller buncher was delivering concrete via the crane bucket. In addition to normal visibility safety protocol for equipment operations, the concrete labour crew always utilized an extra spotter on the ground when delivering concrete to the forms with the crane bucket.

Construction lessons learned

1. The placement of concrete on extremely steep slopes required some experimentation to achieve the proper slump. The concrete could have slid down the slope with too high of a slump and the roller screed and the concrete labourers could have been unable to pull the concrete up the slope with too low of a slump. The construction team settled on a relatively dry 2-in (5-cm) slump mix with a water-to-cement ratio of 0.52 for optimal placement.
2. The work zone was limited to a 60-ft (18-m) wide right-of-way with the road alignment. If more right-of-way and/or side access roads could have been built, a more efficient concrete pumper truck and/or pumping system could have

reached the roadway project. The pumper truck option was implemented successfully at other steep slope locations of the project where side access roads were permitted.

3. The custom fabricated paving skid with the attached roller screed was critical to efficient placement of the concrete slabs. The construction team estimated the concrete placement would have taken four times as long without the paving screed.
4. Placement of transverse tines (or grooves), with the tine rake, in the concrete was critical for vehicle traction. At other sections of the project where concrete sections were placed at similar slopes, but without grooves, conventional four-wheel drive pickup trucks lost traction when attempting to drive up the roads. At the Promontory Point roadway with transverse grooves, the same types of trucks were able to travel up and down the roadway in dry conditions without losing traction.

Pavement monitoring

Concrete pavement movement was evaluated through a closed traverse angle and distance survey during initial construction and again three months after initial service, using a total station survey and established survey benchmarks. The survey points, survey benchmark, lug anchor locations, elevations, roadway grades, and a North arrow are presented in plan and profile views in Fig. 5. The survey points were selected to capture potential movement at the steepest grades, which would likely translate to survey point 1 (SP-1), and to capture any movement below the steepest grade, which would be detected at SP 2 and SP-3. Also, as shown in Fig. 5, some of the lug anchor spacings, namely the 24-ft (7.3-m) anchor spacings shown on the left side of SP-1 in the plan view, were narrower than the maximum spacing specified in Table 2 for the

associated road grade; however, the narrow spacings were chosen by the project team for added conservatism.

The coordinates and elevations of the survey points during the initial survey were compared to coordinates and elevations of the same points after three months of service to evaluation potential movement. The initial survey was conducted while the concrete road (at the east side of Promontory Point and being built from the bottom up) was two-thirds complete with approximately 1,000 ft (305 m) of roadway constructed. Some of the test points for the initial survey were taken on concrete that had been placed five to six days prior to the survey. The coordinates and elevations from the first survey and second survey are shown in Table 4. The change in lateral position was calculated by taking the root sum of squares of the horizontal change in easting and northing coordinates from the two surveys and dividing by the cosine of the slope angle where the survey measurement was taken. There are uncertainty factors that could influence the measured position change, namely survey error, changes in volume due to curing and drying shrinkage, changes in volume due to concrete temperature differences during the two surveys, and potential elastic deformation of the concrete as the remaining one-third of concrete pavement was placed after first survey. The combined effect the uncertainty factors was not computed since data on each of the factors was either limited or not available.

[Table 4 near here].

The authors are not aware of any state highway agency or industry standards that govern acceptable movement of JPCP roadways. As previously stated, CRCP moves more than JPCP since contraction joints are not used. One standard of satisfactory performance used in Illinois for CRCP horizontal movement from temperature fluctuations with lug anchor terminal systems was 3/4 in (19 mm) (Dhamrait and

Taylor, 1977). It should be noted that movement of CRCP, usually without lug anchors or similar terminal systems, has been reported at greater than 2 inches (Burke and Dhamrait, 1967, Teng and Coley, 1970).

The short-term, three-month observation of the roadway and the movement survey indicate the lug anchors have performed satisfactory over a limited time of service. Surveys of three points, found the maximum amount of lateral movement to be 0.71 in (18 mm), less the than the 3/4-in (19-mm) movement standard for CRCP lug anchors in Illinois. Some of the lateral movement measured on the Promontory Point pavement could possibly be attributed to temperature gradients since the weather conditions were different during the two survey dates. As further evidence of satisfactory initial performance, the authors observed no cracking or faulting in the concrete that could signify excessive movement or distress at the lug anchors. Although three months is a short period of time, the concrete would likely experience most of the curing and shrinkage stresses during this period. The authors will continue to monitor the movement of the roadway as access and approval allows.

Conclusion

The Promontory Point concrete roadway project represented the implementation of an original design methodology, using integral lug anchors, for a concrete road at longitudinal slopes of 15 to 60 percent. The lug anchor design methodology and unique project restrictions (e.g. limited right of way, smoothness specifications) required the construction team to develop new construction techniques for the transport, placement, and screeding of concrete. Future roadway surveys and research aim to monitor roadway pavement at Promontory Point and other steep sections on the project, to evaluate the roadway performance and better establish concrete roadway movement tolerances. These future surveys and studies will help to assess the effectiveness of the

design methodology and construction practices presented in this paper and provide the opportunity to update the procedures as necessary.

Tables:

Table 1. Soil properties of in-situ soil from near surface soil borings taken at Promontory Point.

Boring	**Soil classification**	**Dry unit weight**	**Angle of internal friction**
P2-002	ML	129.4	33
P2-003	ML	133.5	34
P2-003.5	ML	124.0	31

Table 2. Earth pressure coefficients, anchor spacing, and factors of safety against sliding for the slopes on the project based on design methodology presented in this paper.

Slope (%)	**Slope-β (degrees)**	**Soil internal angle of friction (degrees)**	**Passive earth pressure coeff.**	**Active earth pressure coeff.**	**Anchor key spacing (ft) [m]**	**FS against sliding**
20	11.3	31	8.13	0.33	120 [36]	-1.93
30	16.7	31	9.11	0.37	120 [36]	-23.82
40	21.8	31	10.22	0.41	120 [36]	3.10
50	26.6	32	12.19	0.54	72 [22]	1.58
60	31.0	33	15.33	0.83	48 [14.6]	1.53
70	35.0	35	19.98	0.95	24 [7.3]	1.96

Table 3. The 4,000 psi compressive strength concrete mix design used on the Promontory Point roadway project

Mix proportions			
Water/cement ratio		0.52	
Calculated unit weight		142.5 lb/ft^3	
Target slump		2 in +/- 1 in	
Target air content		1.5 %	
Material	**Quantity (per/yd^3)**	**Specific gravity**	**Volume (ft^3 per yd^3)**
Cement (Type I/II)	480 lb	3.14	2.45
Fly ash (Class F)	120 lb	2.2	0.87
Water	315 lb (37.8 gal)	1.0	5.05
Fine aggregate	1288 lb	2.591	7.94
Coarse aggregate	1650 lb	2.590	10.21
Air content	1.5 %		0.40
Water reducer	4.0 oz/cwt		
Hydration stabilizer	5.0 oz/cwt		
		Total	26.9

Table 4. Survey data, horizontal position change, and vertical position change of surveys taken during initial construction and three months after initial service.

Point	**Coordinates – 1st Survey**		**Coordinates – 2nd Survey**		**Elevation of Initial Survey (ft)**	**Elevation of 2nd Survey (ft)**	**Lateral Position Change (in)**
	Northing (ft)	**Easting (ft)**	**Northing (ft)**	**Easting (ft)**			
SP-01	412870.63	324049.60	412870.53	324049.65	1654.56	1654.52	0.71
SP-02	413008.43	323997.97	413008.34	323997.98	1601.26	1601.21	0.54
SP-03	413132.27	323950.93	413132.17	323950.89	1557.86	1557.81	0.65

Figures:

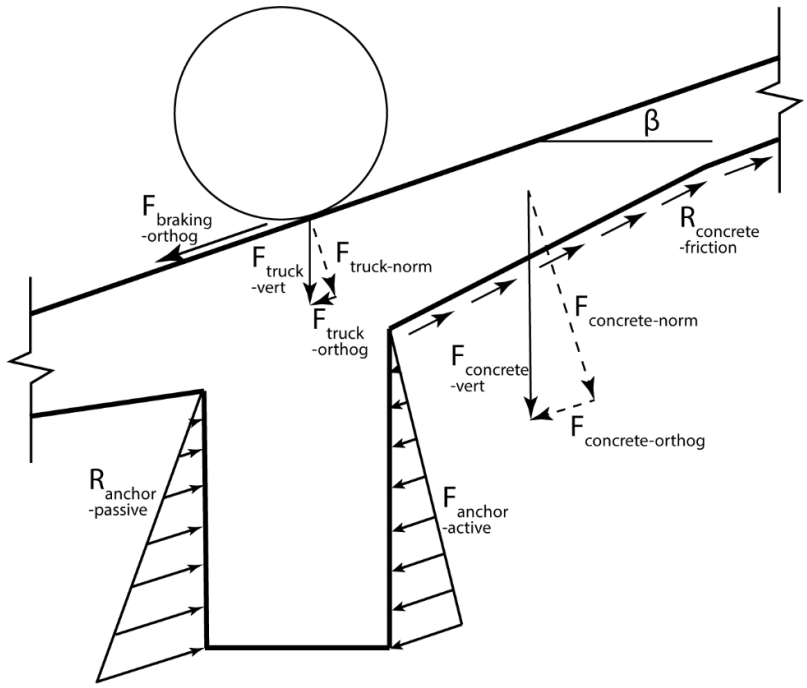

Figure 1. Profile view of concrete lug anchor schematic with applied loads used in the design methodology.

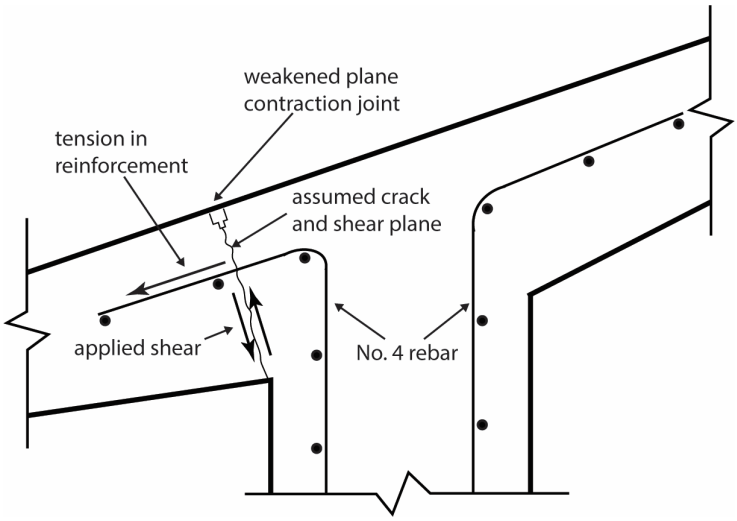

Figure 2. Profile view of concrete lug anchor schematic with tension in shear-friction reinforcement loads.

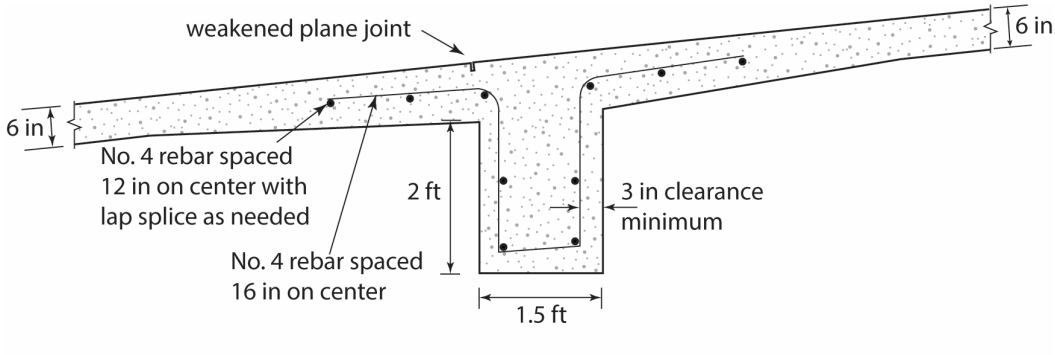

Figure 3. Profile view of concrete lug anchor and roadway pavement showing dimensions and taper of roadway on both sides of lug anchor.

Figure 4. Sequential photographs of the construction process showing a. an excavated trench footing for a concrete lug anchor with an inverted standee reinforcement bar section inserted, b. the concrete delivered to a track loader equipped with a hydraulic side-dump bucket, c. the concrete delivered to the forms via a crane bucket attached to a feller buncher machine, d. the paving skid above concrete slab placement with winches attached to a concrete roller screed, e. the roller screed being pulled up the grade to form the fresh concrete, and f. the finished concrete surface with a plastic preformed contraction joint, transverse tining, and liquid spray on curing membrane.

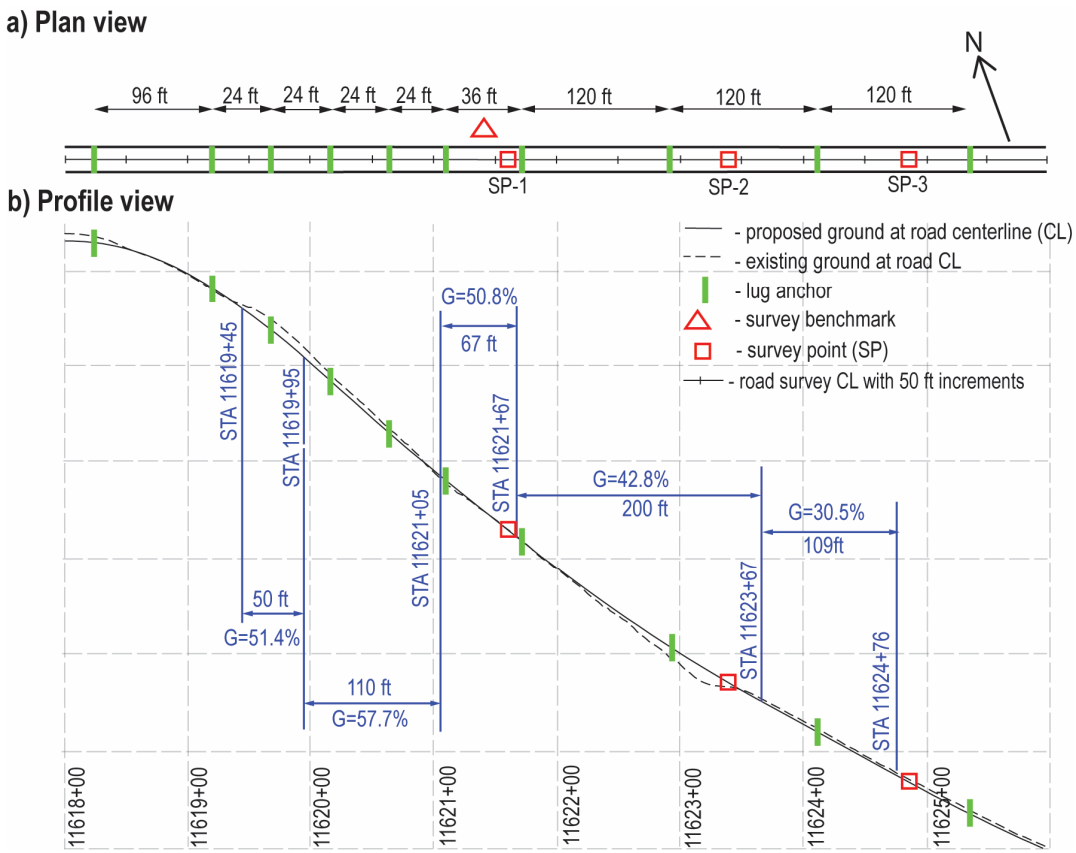

Figure 5. a. Plan and b. profile views of survey points, benchmarks, lug anchor locations, elevations, and grades for the concrete roadway pavement at Promontory Point.

AASHTO 1993. Guide for the Design of Pavement Structure. Washington, D.C: American Association of Highway and Transporations Officials.

ACI COMMITTEE 318 2019. Building code requirements for structural concrete (ACI 318-19) and commentary on building code requirements for structural concrete (ACI 318R-19). Farmington Hills, MI: American Concrete Institute.

ACI COMMITTEE 330 2017. Guide for the design and construction of concrete site paving for industrial and trucking facilities (ACI 330.2R-17). Farmington Hills, MI: American Concrete Institute.

BARBER, E. S. 1963. Shear Loads on Pavements. *Public Roads,* 32**,** 141-144.

BURKE, J. E. & DHAMRAIT, J. S. 1967. A twenty-year report on the Illinois continuously reinforced pavement. *Highway Research Record,* 189**,** 197-211.

CAQUOT, A. I. & KÉRISEL, J. L. 1948. *Tables for the calculation of passive pressure, active pressure and bearing capacity of foundations,* Paris, Gauthier-Villars.

CARGNIN, A. P. & BALBO, J. T. 2021. Cracking patterns of continuously reinforced concrete pavement using black and galvanized steel under tropical climate. *International Journal of Pavement Engineering,* 22**,** 41-53.

DHAMRAIT, J. S. & TAYLOR, R. K. 1977. Terminal Treatments for Illinois Continuously Reinforced Concrete Pavements. *Interim Report IHR-36.* Springfield, IL: Illinois Department of Transportation.

DOS ANJOS RIBEIRO CORDEIRO, M. J., BENNETT, C. R., MICHAELS, S. D., PEDROSO, F. F. F., FORNI, M. S. & ROZENBERG, J. 2017. Climate and disaster resilient transport in small island developing states: a call for action. The World Bank.

DUNCAN, J. M. & MOKWA, R. L. 2001. Passive earth pressures: theories and tests. *Journal of Geotechnical and Geoenvironmental Engineering,* 127**,** 248-257.

HUANG, Y. H. 1993. *Pavement analysis and design,* Upper Saddle River, NJ, Pearson Prentice Hall.

JAISWAL, H. 2012. *Rational use of terminal systems in Portland cement concrete pavements.* Texas Tech University.

JOHNSON, S., FAIZ, A. & VISSER, A. 2019. Concrete Pavements for Climate Resilient Low-Volume Roads in Pacific Island Countries. The World Bank.

KARIM, M. R., ABDULLAH, A., YAMANAKA, H., ABDULLAH, A. S. & RAMLI, R. 2013. Degree of vehicle overloading and its implication on road safety in developing countries. *Civil and Environmental Research,* 3**,** 20-31.

MCCULLOUGH, B. F. 1971. Evaluation of Terminal Anchorage Installations on Rigid Pavements. *Highway Research Record***,** 21-29.

MCCULLOUGH, B. F. & WU, W.-Y. 1992. Terminal movement in continuously reinforced concrete pavements. *Research Report No. 1169-4.* Austin, TX: Texas Department of Transportation.

MITCHELL, R. A. 1963. End Anchors for Continuously-Reinforced Concrete Pavements. *Highway Research Record***,** 50-82.

NAVFAC 1986. Design Manual 7.02, Foundations & Earth Structures. Alexandra, VA: Department of the Navy, Naval Facilities Engineering Command.

OH, H. J., CHO, Y. K., SEO, Y. & KIM, S.-M. 2016. Experimental evaluation of longitudinal behavior of continuously reinforced concrete pavement depending on base type. *Construction and Building Materials,* 114**,** 374-382.

PERRIE, B. 2000. *Low-volume concrete roads,* Midrand, South Africa, Cement and Concrete Institute.

POTYONDY, J. G. 1961. Skin friction between various soils and construction materials. *Geotechnique,* 11**,** 339-353.

RAZOUKI, S. S., AL-MUHANNA, R. & HASHIM, Z. 2020. Average full-trailer truck equivalency factors for uphill flexible pavements in developing countries. *International Journal of Pavement Engineering*.

RAZOUKI, S. S. & RADEEF, H. Y. 2005. Increased damage to uphill flexible pavements from trucks. *Proceedings of the Institution of Civil Engineers-Transport,* 158**,** 33-34.

REN, D., HOUBEN, L. & RENS, L. 2013. Cracking behavior of continuously reinforced concrete pavements in Belgium: characterization of current design concept. *Transportation research record,* 2367**,** 97-106.

ROESLER, J. R., HILLER, J. E. & BRAND, A. S. 2016. Continuously Reinforced Concrete Pavement Manual, Guidelines for Design, Construction, Maintenance, and Rehabilitation. United States. Federal Highway Administration.

RYU, S. W., JAISWAL, H., CHOI, S., SENADHEERA, S., JAYAWICKRAMA, P. & WON, M. C. 2012. Rational use of terminal anchorages in Portland cement concrete pavement. *Transportation research record,* 2305**,** 62-73.

SHELBY, M. D. & LEDBETTER, W. B. 1962. Experience in Texas with terminal anchorage of concrete pavement. *Highway Research Board Bulletin*.

TENG, T. & COLEY, J. 1970. Continuously Reinforced Concrete Pavement Observation Program. *Report No. 1.* Jackson, MS: Mississippi State Highway Department.

TERZAGHI, K. 1943. *Theoretical Soil Mechanics,* New York, John Wiley & Sons.

UFC 3-250-01 2016. *Pavement design for roads and parking areas,* U.S. Army Corps of Engineers.

WESTERGAARD, H.M. 1926 Stresses in concrete pavements computed by theoretical analysis. *Public Roads.* 7, 25-35.

ZOLLINGER, D. G. & SOARES, J. 1999. Performance of Continuously Reinforced Concrete Pavements, Volume VII-Summary. Federal Highway Administration (FHWA).